fima | CARLO FRATTINI rubinetteria

F4274/1CR

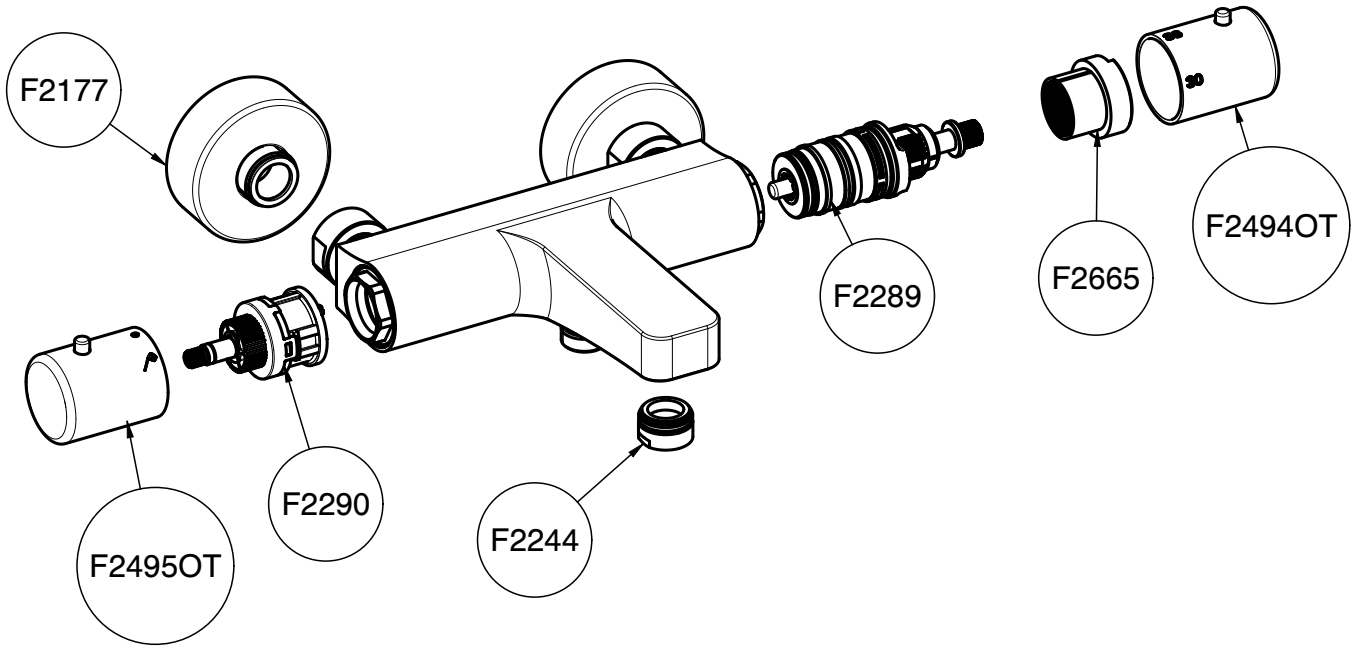

This drawing is the property of FIMA Carlo Frattini. Any complete or partial reproduction, or any transmission to third party without FIMA Carlo Frattini authorization is forbidden.