fima | CARLO FRATTINI rubinetterie

F4039X2

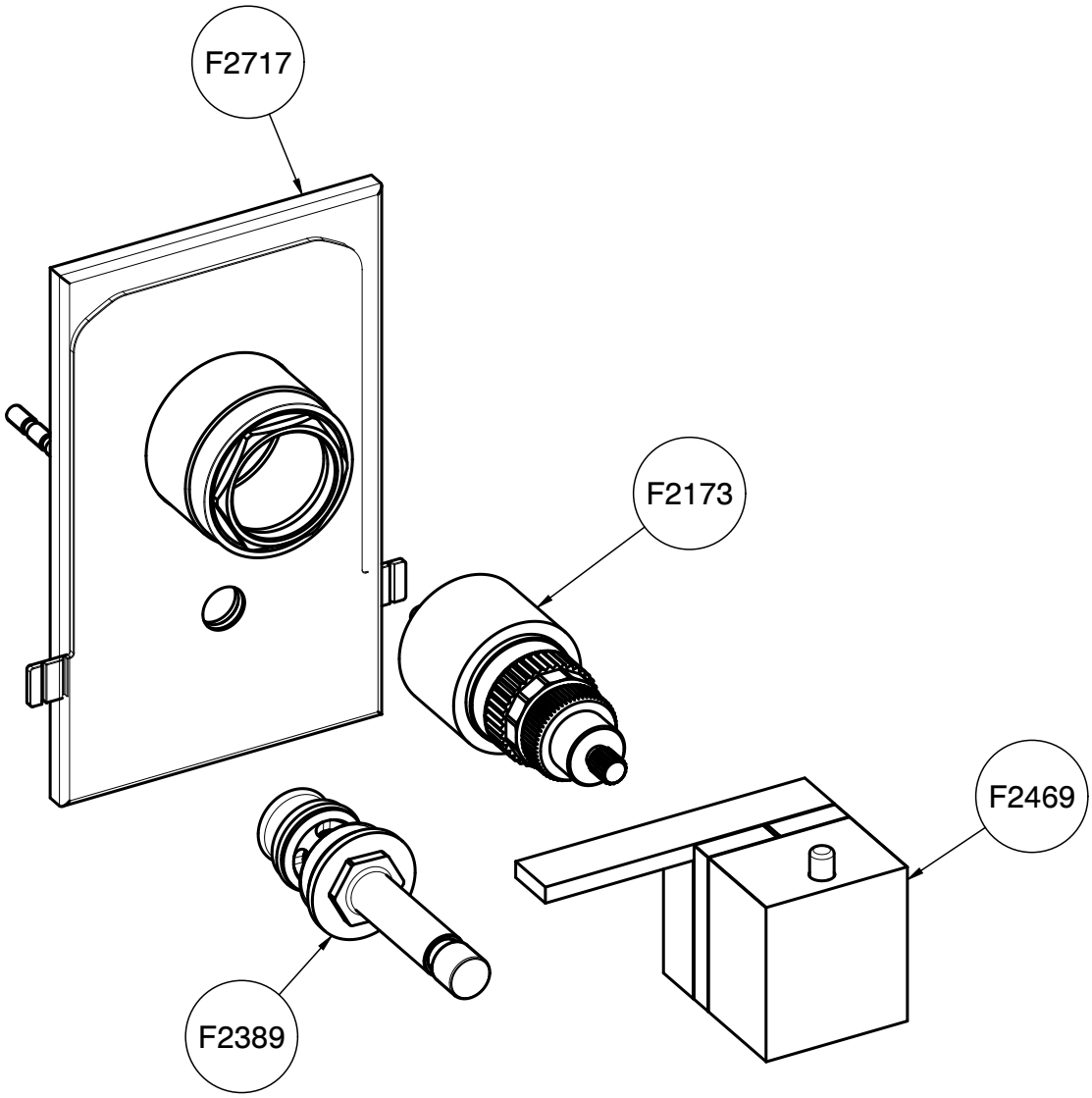


This drawing is the property of FIMA Carlo Frattini. Any complete or partial reproduction, or any transmission to third party without FIMA Carlo Frattini authorization is forbidden.