fima | CARLO FRATTINI rubinetteria

F3964/1

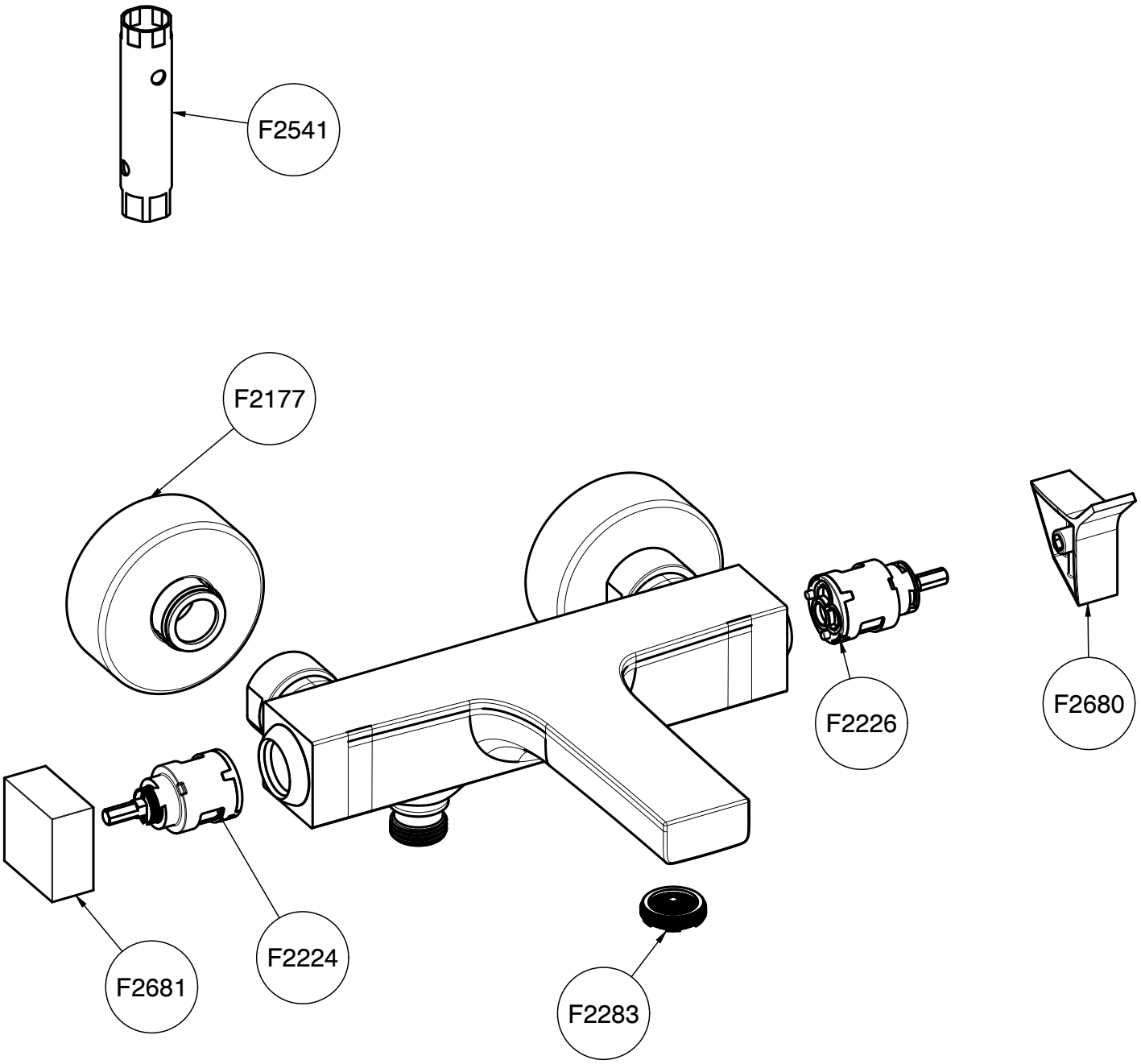


This drawing is the property of FIMA Carlo Frattini. Any complete or partial reproduction, or any transmission to third party without FIMA Carlo Frattini authorization is forbidden.