fima | CARLO FRATTINI rubinetterie

F3172

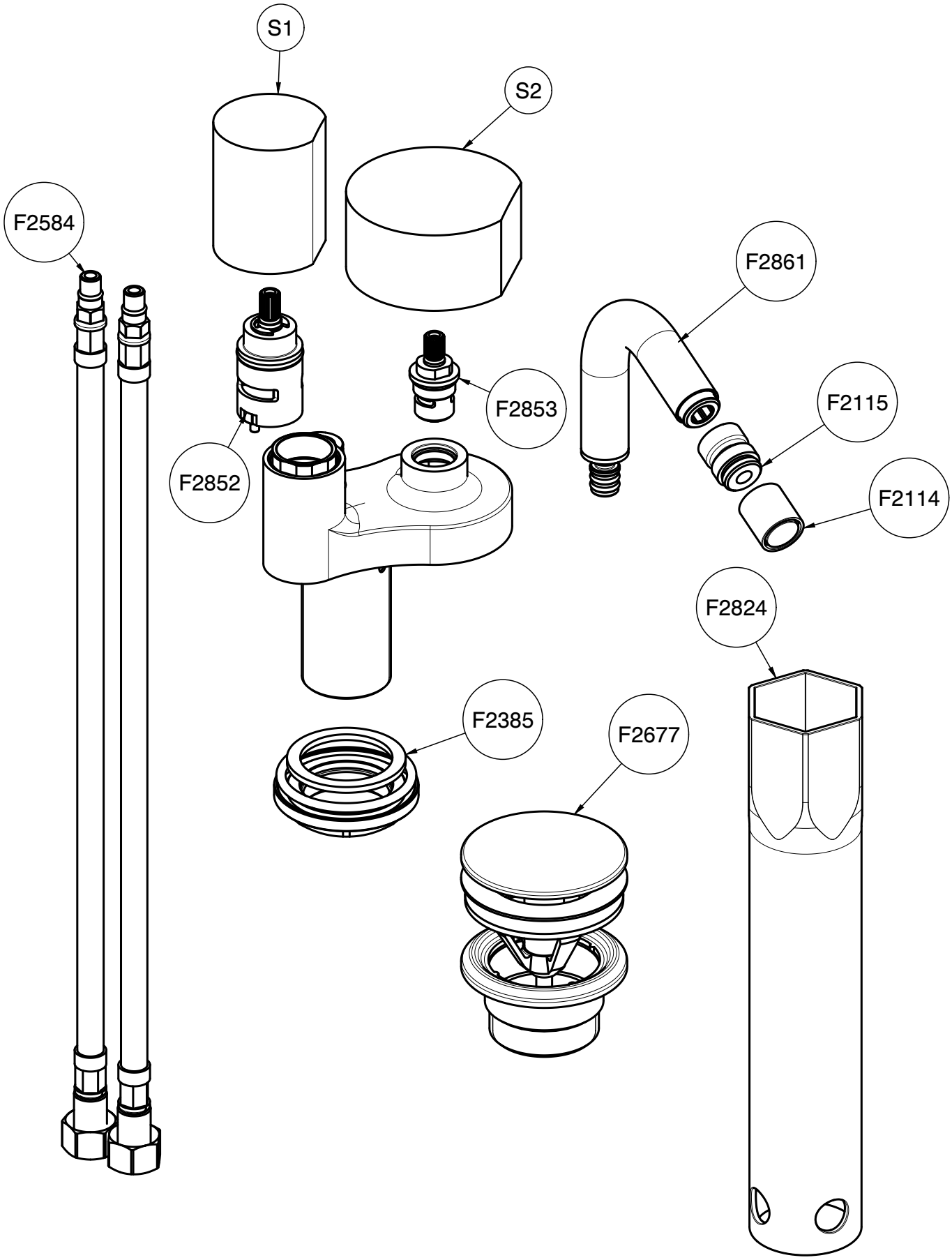

This drawing is the property of FIMA Carlo Frattini. Any complete or partial reproduction, or any transmission to third party without FIMA Carlo Frattini authorization is forbidden.